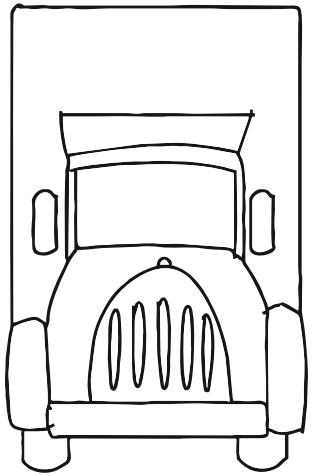

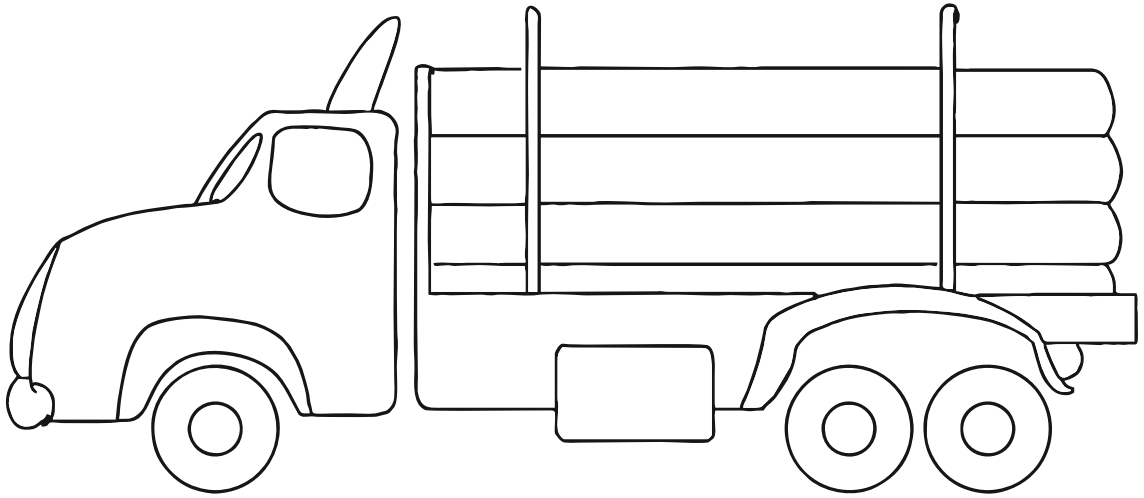

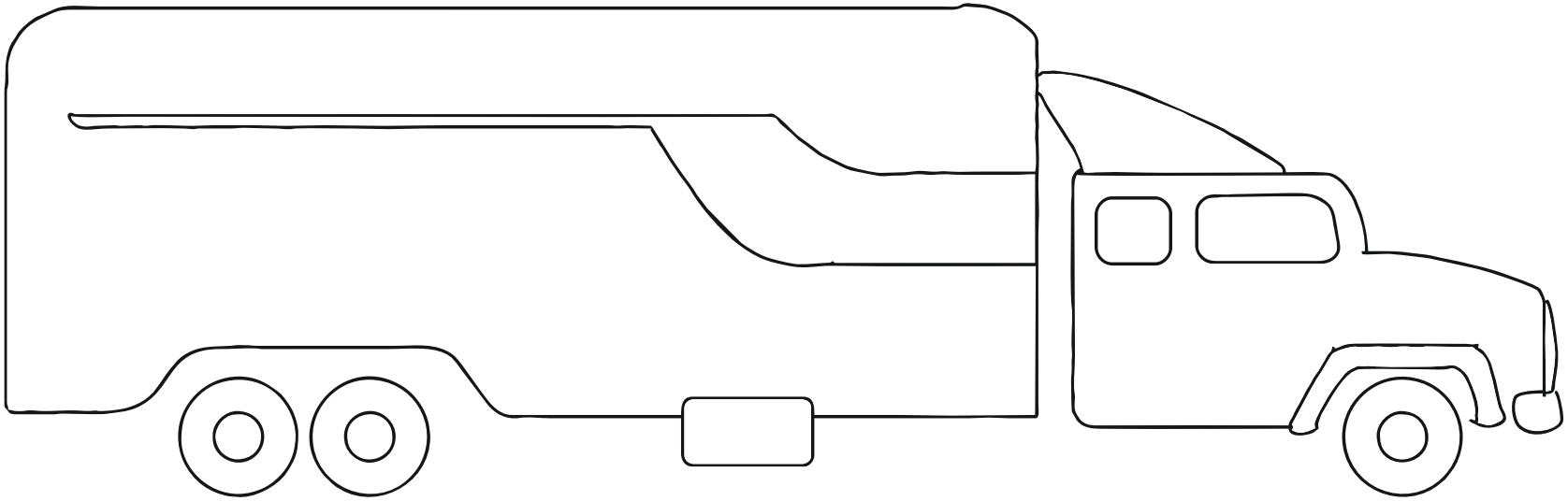

Cliparts, Colorings, Worksheets - © www.CliparsFree.de